92-0896 Orig. 001215
Model 75-0115 Air Caddy

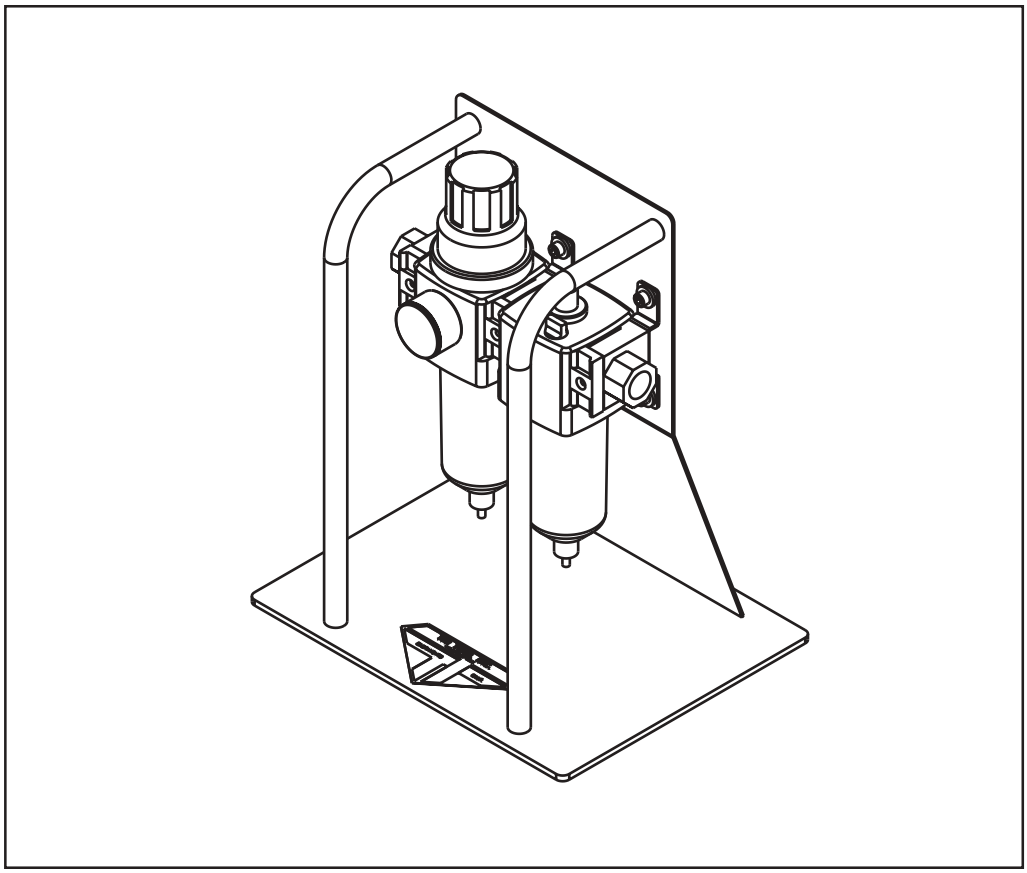

TABLE OF CONTENTS

CUSTOMER MESSAGE	Inside Front Cover
SAFETY PRECAUTIONS	3
GENERAL DESCRIPTION	6
SPECIFICATIONS	7
MAINTENANCE	9
INSTALLATION AND OPERATION	12
ACCESSORIES	16
ILLUSTRATED PARTS BREAKDOWN	17
MATERIAL SAFETY DATA SHEET	18
TOOL BIT RESHARPENING POLICY	Inside Back Cover
WARRANTY INFORMATION	Inside Back Cover

Copyright 2000 proprietary property of TRI TOOL Inc.
No reproduction, use, or duplication of the information
shown hereon is permitted without the express written
consent of TRI TOOL Inc.

SAFETY PRECAUTIONS

IN GENERAL

When using rotating head cutting equipment, basic safety precautions should always be followed to reduce the risk of personal injury.

Operate this tool only in accordance with specific operating instructions.

Do not override the deadman switch on the power unit. Locking down, obstructing, or in any way defeating the deadman switch on the power drive unit may result in serious injury.

DRESS CONSIDERATIONS

Use standard safety equipment. Hard hats, safety shoes, safety harnesses, protective clothes, and other safety devices should always be used when appropriate.

Use safety glasses. Do not operate cutting tools without eye protection.

Dress properly. Do not wear loose clothing or jewelry. They can be caught in rotating and moving parts. Avoid slippery floors or wear nonskid footwear. If you have long hair, wear protective hair covering to contain it.

WORK AREA

Keep the work area clean. Cluttered work areas and benches invite injuries.

Consider the work area environment. Keep the area well lit. Keep electrical cords, cables, rags, rigging straps, and etc. clear of rotating equipment. Do not use power-cutting tools in the presence of flammable liquids and gasses.

Keep visitors away. Do not let visitors or untrained personnel at or near operating tools. Enforce eye protection requirements for all observers.

Do not over reach. Keep proper footing at all times.

Stay alert. Watch what you are doing. Use common sense. Do not operate tools when you are tired.

TOOL CARE

Maintain tools with care. Keep tools in good operating condition. Sharp tool bits perform better and safer than dull tool bits. Well maintained tools function properly when needed.

Check for damaged parts. If a tool has malfunctioned, been dropped or hit, it must be checked for damage. Run no-load tests and feed function checks. Do a complete visual inspection.

Electric motors. Use only with proper AC voltage power sources and observe all normal electric shock hazard procedures.

Do not abuse power and control cords. Pulling or running over cords and cables can result in electrical shock hazards and malfunctions. Keep control and power cords out of all cutting fluids and water.

Hydraulic drives. Observe proper procedures for electrically driven power sources. Avoid damage to hydraulic lines. Keep quick-disconnects clean. Grit contamination causes malfunctions.

Air tools. Check the exhaust muffler. Broken or damaged mufflers can restrict air flow or cause excessive noise. Use air motors only with a filtered, lubricated and regulated air supply. Dirty air, low-pressure air or over pressure air will cause malfunctions, including delayed starting.

AREA EQUIPMENT

Secure work. Whenever possible use clamps, vises, chains and straps to secure pipe.

Make sure the tool is secured; it is safer to have both hands free to operate the tool.

TOOL USE

Use the right tool and tool bit for the job. Do not use a tool, which is incorrect for the job you are doing.

Keep the tool bits fully engaged in the tool bit holders. Loose bits are a safety hazard.

Disconnect power supply during setup and maintenance. Use all ‘Stop’ or Shut off’ features available when changing or adjusting tool bits, maintaining the tool, or when the tool is not in use.

Remove adjusting keys and wrenches before applying power to the equipment. Develop a habit of checking the tool before turning it on to make sure that all keys and wrenches have been removed.

Do not force tools. Tools and tool bits function better and safer when used at the feed and speed rate for which they were designed.

Do not reach into rotating equipment. Do not reach into the rotating head stock to clear chips, to make adjustments, or to check surface finish. A machine designed to cut steel will not stop for a hand or an arm.

Handle chips with care. Chips have very sharp edges and are hot. Do not try to pull chips apart with your hands; they are very tough.

Avoid unintentional starts. Do not carry or handle tools with your hand on the operating switches or levers. Do not lay the tool down in a manner that will start the drive. Do not allow the tool to flip around or move when adjusting or changing tool bits.

Store idle tools properly. Disconnect tools from the power source and store in a safe place. Remove tool bits for safe handling of the tool.

GENERAL DESCRIPTION

The Air Caddy (P/N 75-0115) is a modular Filter/Regulator/Lubricator (FRL) unit.

The filter removes solid and liquid contaminates in compressed air that produce wear in air driven equipment.

The regulator reduces and holds compressed air to a desired working pressure.

The lubricator automatically lubricates air driven equipment by introducing small droplets of oil into the air stream.

The Air Caddy is supplied with 10’ (3m) of 3/4” (19mm) diameter hose with a 3/4” NPT male end connect to the outlet port on the Air Caddy and a quick disconnect to connect to the tool.

The inlet port of the Air Caddy is a 3/4” NPT female to which the customer must provide an air supply line.

The Air Caddy is recommended for use with all air motors supplied with TRI TOOL Inc. products.

NOTE:	Operation of any TRI TOOL Inc. air powered equipment without the use of an air filter/regulator/lubricator (FRL) will void the warranty for that equipment.

SPECIFICATIONS

Air Caddy Assembly (P/N 75-0115)

Weight: 18.2 lbs. (8.3 kg)

Assembly Specifications:

Maximum Flow:	110 scfm at a 90 psi rating (76 lt/sec at a 6.3 kg/cm^2)
Pressure Range:	0 to 125psi (0 to 8.8 kg/cm^2)

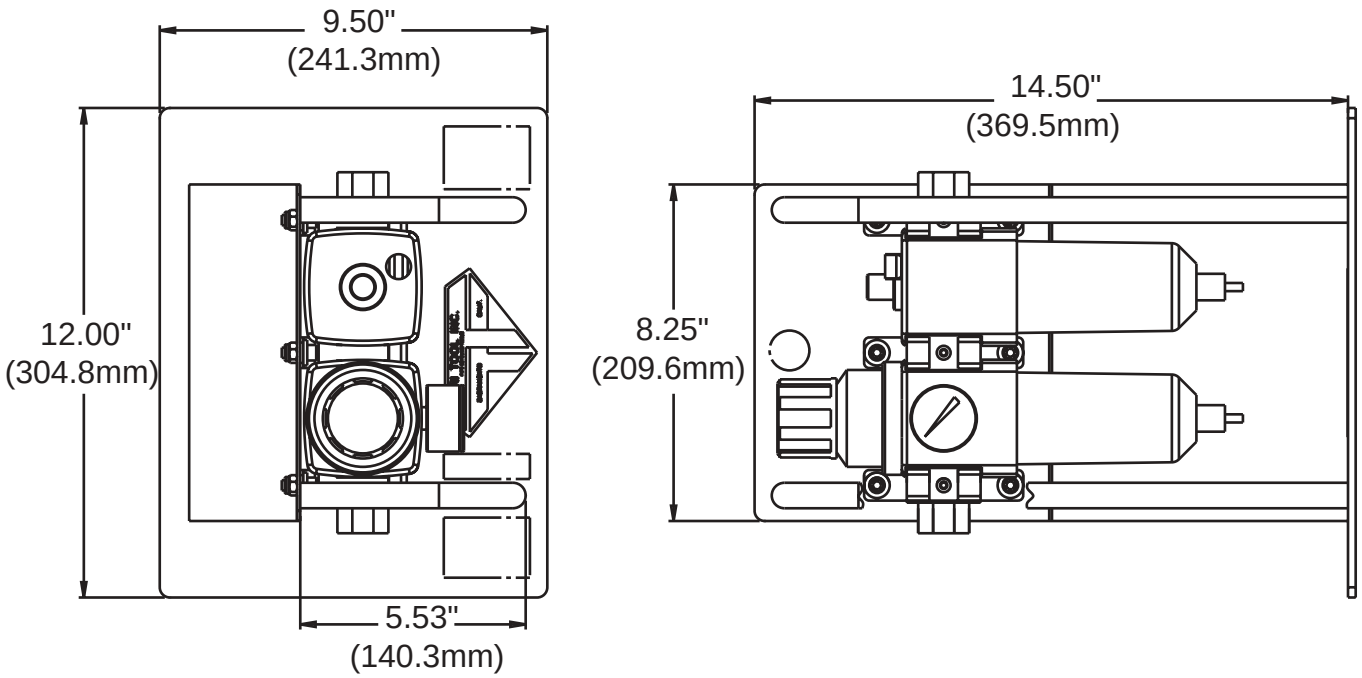

Envelope, Air Caddy Assembly (P/N 75-0115)

Filter / Regulator Unit:

Bowl - Maximum operating conditions: 250^0 psig at 175^0 F (12.3 kg/cm^2 at 79$^{0\ C)}$

Bowl size - 2.87 oz (.09 lt)

Filter element - 5 micron (5 x 10 $^{-3}$ mm)

Air Flow - 165 scfm (78- lt/sec) [Flow rating is at 100 psig (7.0 kg / cm^2) inlet pressure with a 10 psi (.7 kg/cm^2) pressure drop].

Pressure range - 0 to 125 psi (0 to 8.8 kg/cm^2)

Lubricator Unit:

Bowl - Maximum operating condition - 250 psig at 175^0 F (12.3 kg/cm^2 at 98^0 C).

Bowl size - 6.11 oz (.181L)

Air Flow - 200 scfm (94 lt/sec) [The flow rating is at 100 psig (7.0 kg/cm^2) inlet pressure with a 10 psi (.7 kg/cm^2) pressure drop].

MAINTENANCE

Do not operate the Air Caddy Assembly unit until you have read the Operator's Manual.

When the bowl becomes dirty, replace the bowl or wipe with a clean dry cloth.

CAUTON: Depressurize the unit before removing either bowl.

Filter / Regulator Maintenance:

Each filter unit must be operated with a filter element.

Periodically clean the filter element by removing the filter by tapping on the surface; blow off debris with an air blowgun.

Change filter when pressure drop exceeds 10 psig or every 12 months.

To remove the filter element:

Turn the air pressure off and vent the air from the Air Caddy system.

Rotate the bowl to unearth it from the filter body.

Periodically drain the accumulated moisture from the filter unit by turning the drain knob on the bowl counter clockwise.

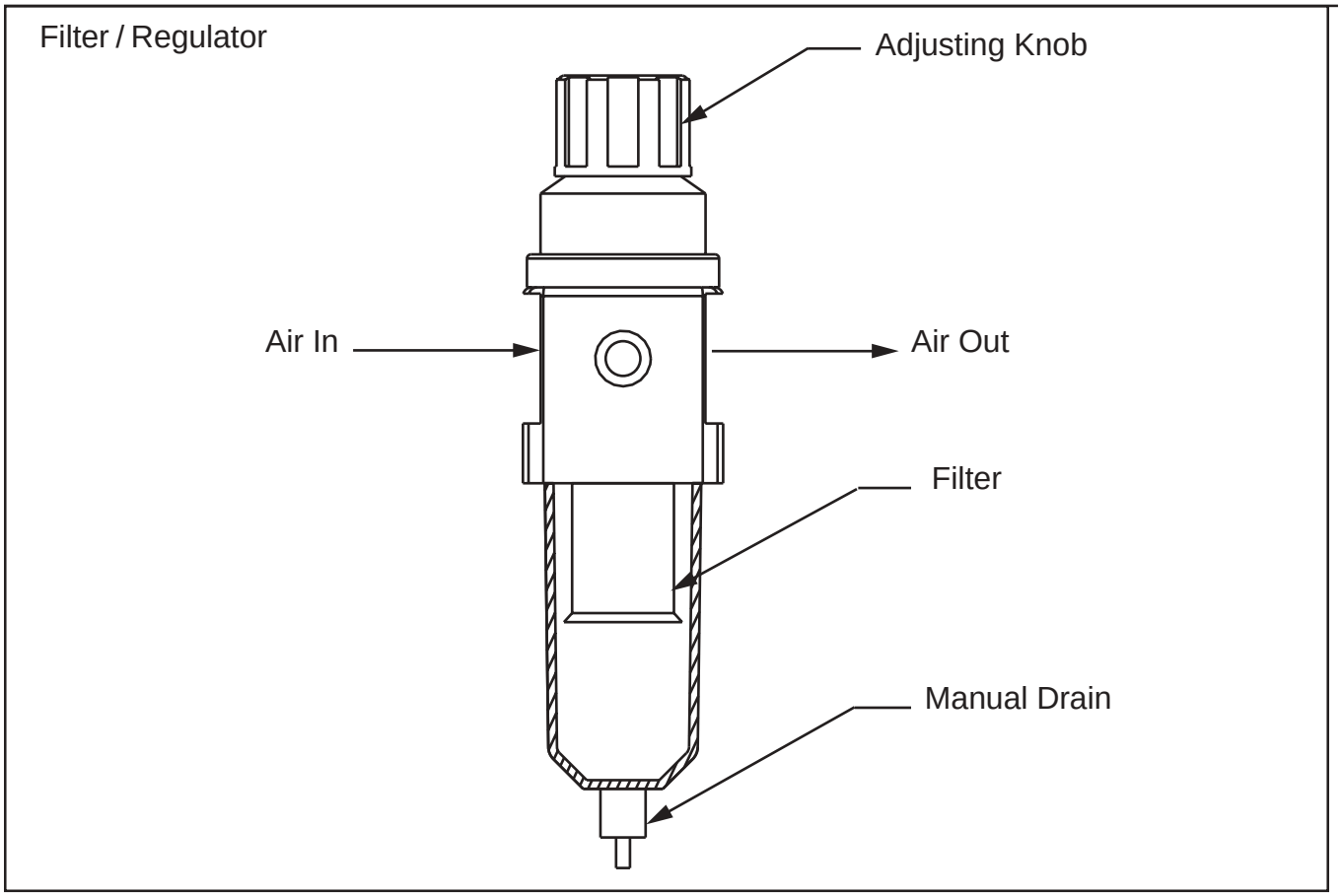

Lubricator maintenence:

Depressurize the system before removing the bowl.

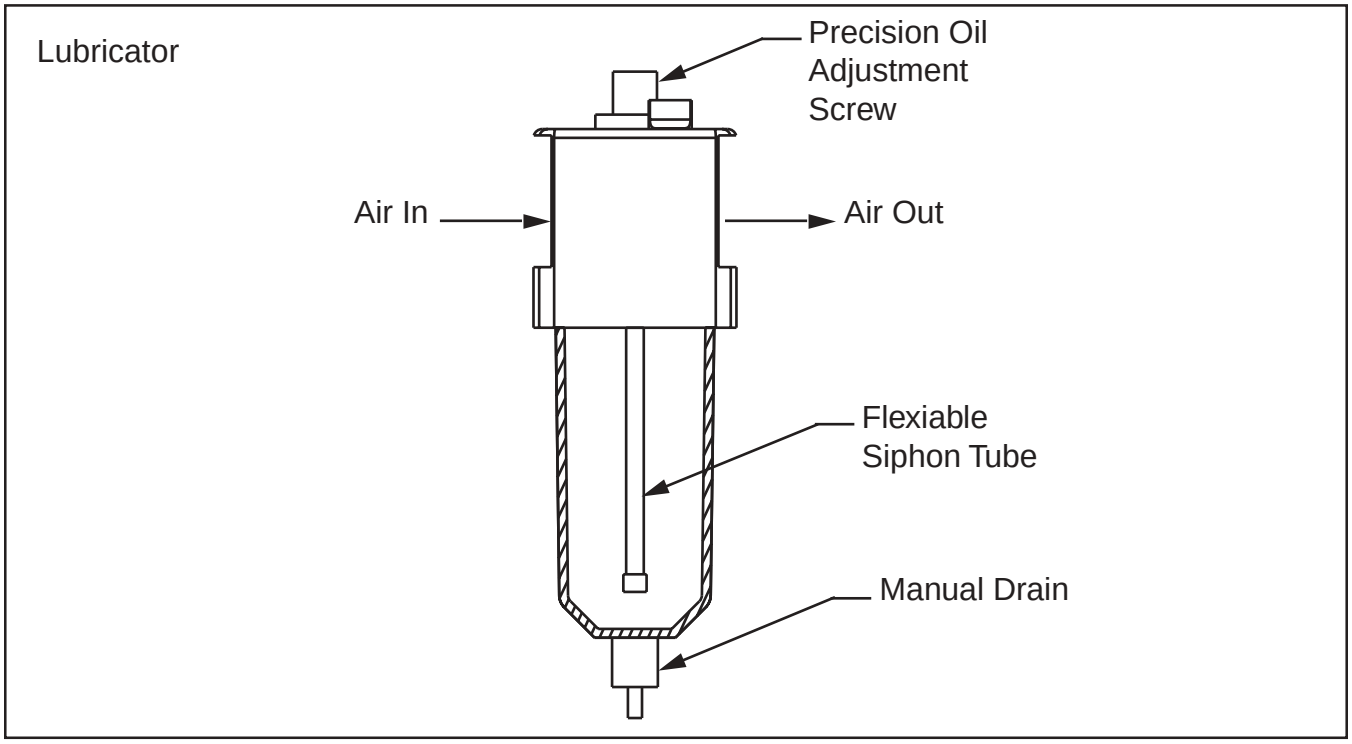

When servicing the lubricator with oil, use only clean, NON-DETERGENT OIL, preferably SAE 10 (90 SSU) or lighter. (P/N 68-0022 is recommended)

NOTE: Sears regular motor oil or Sinclair “motor oil” are **not** recommended.

Fill the lubricator through the large fill port on top of the lubricator unit approximately 3/4 full. Do not fill to the top of the bowl.

CAUTON: The lubricator may **not** be filled with oil while the unit is under pressure.

Periodically remove the adjusting screw and clean the needle and the seat in the body by blowing off with an air blow gun.

Drain off any contaminants which may collect in the bottom of the bowl.

INSTALLATION AND OPERATION

Install the Air Caddy as close as possible to the point where air is to be used.

The input port to the Air Caddy has 3/4” NPT female threads.

Avoid using fittings, couplings, etc. that restrict the air flow.

Make sure that the hose is connected to the fittings on the lubricator (right side/ output) with Teflon based pipe dope or thread tape.

Make sure that the Air Caddy is operated with the air flowing in the direction indicated by the arrows shown on the front of the filter/ regulator and lubricator (FRL).

CAUTION: This product is specifically designed for compressed air service, and use with any other fluid (liquid gas) is a misapplication.

For example, use with or injection of certain hazardous liquids or gases in the system (such as alcohol or liquid petroleum gas) could be harmful to the unit or result in a combustible condition or hazardous external leakage.

The manufacture’s warranties are void in the event of misapplication, and the manufacturer assumes no responsibility for any resulting loss.

This unit comes equipped with bowls for the filter/ regulator and lubricator (FRL).

The bowls are restricted to a maximum pressure of 250 PSIG (17 bar).

Do not install the Air Caddy system in a line that will exceed 250 PSIG (17 bar) or the bowls may fail.

The Air Caddy comes equipped with a 10’ (3 M) length of 3/4” (19 mm) hose and associated fittings.

Air Caddy Operation:

Drain all of the accumulated moisture from the filter at least once per work shift or when the bowl is full.

Drain accumulated moisture from the filter by turning the filter drain counter clockwise.

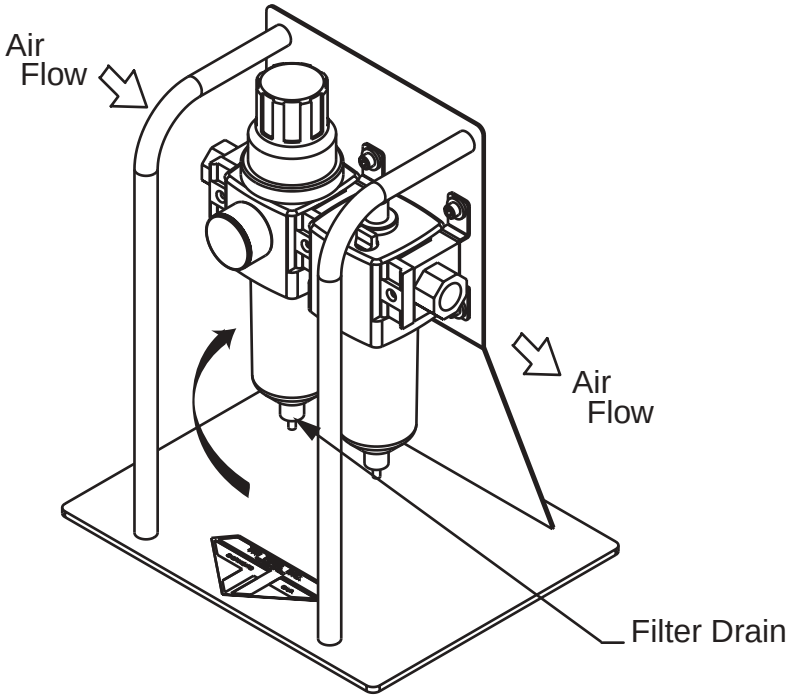

Opening the Filter Drain

Set the regulator pressure by lifting the adjustable knob .

To raise the regulator pressure, turn the adjustable knob clockwise.

To lower the regulator pressure, turn the adjustable knob counterclockwise.

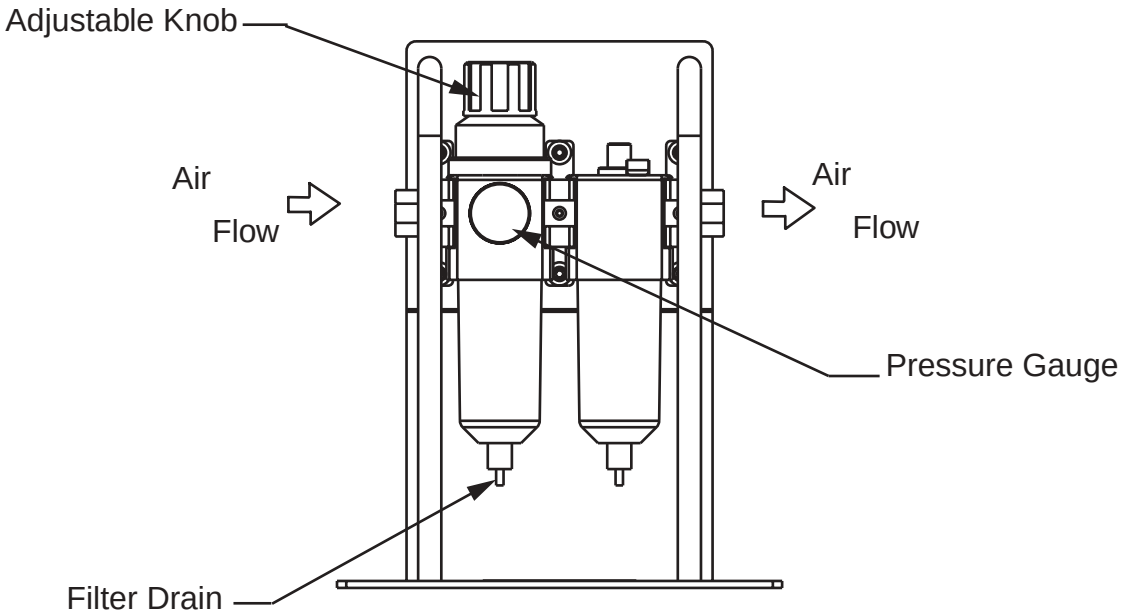

Setting the Regulator pressure

When the desired operating pressure is achieved, the operator may lock the adjusting knob by pushing it down.

To adjust the lubricator oil flow rate, turn the precision oil adjustment knob on the top of the lubricator unit.

CAUTION: The oil flow response time is slow.

Start the lubricator oil flow rate, close the precision oil adjustment screw no more than finger tight and then back it off 1/4 turn.

This is to prevent damage to the needle or the valve seat inside of the lubricator.

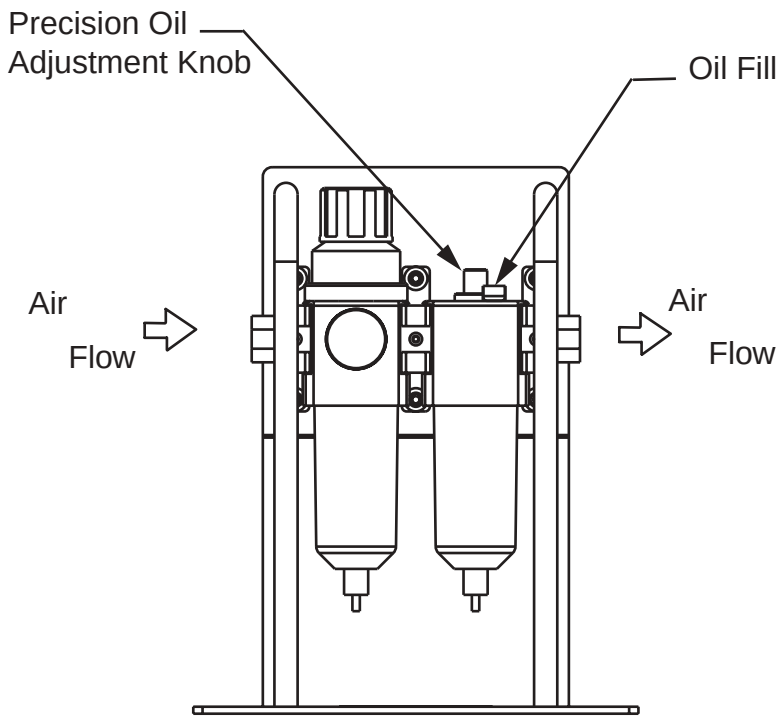

Setting the Lubricator flow

The precision oil adjustment knob will break if over tightened.

For required flow rates see chart the following page.

NOTE: This adjustment should be made with the air motor attached and running.

Clockwise decreases the rate of oil flow.

Counterclockwise increases the rate of oil flow.

NOTE: Once set, the Flow-Guide® variable orifice in the lubricator will maintain the same ratio of oil to air flow regardless of any change in the air flow rate.

Drops per Minute	Regulator Pressure	Air Drive Source
1 - 2	Do not exceed the Manufacturers recommended Air Pressure Rating for the Air Motor used.	Small
2 - 3		Medium
3 - 4		Large
Lubricator Flow Rate		

NOTE: When the air flow stops, the lubricator stops the flow of oil.

As a general guideline for adjusting the amount of oil flowing to an air motor, the operator can observe the amount of oil being exhausted from the exhaust port(s) on the air motor.

If the amount of oil builds up rapidly at the port(s), the rate is too high.

The operator should reduce the number of drops of oil per minute accordingly.

ACCESSORIES

The following accessories are available for use with the Air Caddy from TRI TOOL Inc.

Filter Element replacement, 5 Micron (P/N 75-0117)

Gauge replacement, 0 -160 psig (P/N 75-0118)

Bowl O-ring replacement, Nitrile (P/N 75-0119)

Metal Bowl w/ Sight Gauge replacement (P/N 75-0120)

Spring, regulating 0 -250 psig (P/N 75-0121)

Regulator - Valve Assembly (P/N 75-0122)

Lubricator - Siphon Tube Assembly (P/N 75-0124)

Lubricator - Fill Plug Kit (P/N 75-0125)

Regulator - Relieving Diaphragm Assembly (P/N 75-0123)

Case, Carrying, Air Caddy (P/N 86-0197)

ILLUSTRATED PARTS BREAKDOWN

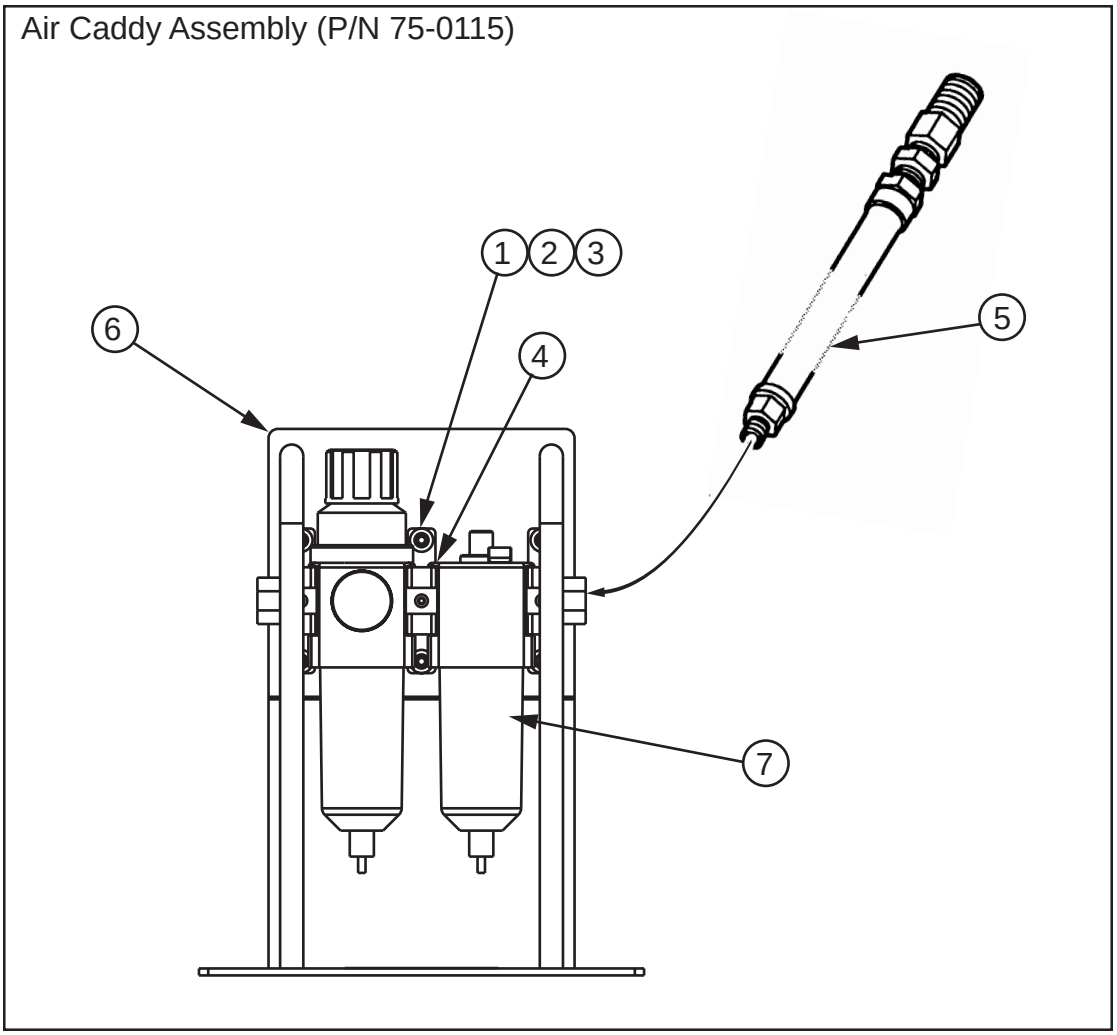

Parts List, Assembly, Air Caddy (P/N 75-0115)

Item No.	Part No.	Description	Qty.
1.	33-0039	SCREW, CAP	6
2.	34-0026	WASHER FLAT	6
3.	35-0055	NUT, HEX	6
4	47-1307	BRACKET, MOUNTING	3
5.	55-0037	HOSE ASSEMBLY	1
6.	60-0091	STAND, AIR CADDY	1
7.	75-0116	FRL COMBINATION UNIT	1
NOT SHOWN:			
	68-0022	AIR TOOL LUBRICANT	1 QT.

Royal Purple, Ltd.

Material Safety Data Sheet

I.

Product Name: **Synway®** Date Issued/Revised: October 11, 2005
Chemical Family: Synthetic based lubricating oil
Use: Lubricant and corrosion inhibitor
Manufacturer: Royal Purple, Ltd.
Address: 1 Royal Purple Lane, Porter, Texas 77365 USA
Phone: 281-354-8600 Emergency Phone: 281-354-8600 Fax: 281-354-7600

II. Components:

- Base Oil (synthetic with highly refined mineral oil) — Synthetic additives with iso-paraffinic diluents.
- The precise composition of this oil is proprietary. A more complete disclosure will be provided to a physician or nurse in the event of a medical emergency.
- All components of this product are listed on the U.S. TSCA inventory.
- This product contains no hazardous substances within the definition of OSHA Regulation 29 CFR 1910.1200.
- Royal Purple certifies that this product has been evaluated for RCRA characteristics and does not meet the criteria of a hazardous waste if discarded in its purchased form.

III. Main Hazards / Health Effects:
Eyes: May cause irritation.
Inhalation: Oil mist may line breathing passages with oil making breathing difficult.
Ingestion: May cause diarrhea.
Skin: May irritate the skin after prolonged periods of contact.

IV. First Aid:
Eyes: Flush with water until all residual material is gone. If irritation persists, seek medical help.
Inhalation: Clear air passage. If respiratory difficulty continues, seek medical help.
Ingestion: Wash out mouth immediately. Do not induce vomiting. Consult physician.
Skin: Wash thoroughly with hand cleanser, followed by soap and water. Contaminated clothing should be dry cleaned before reuse.

V. Extinguishing Media:
Suitable: Foam, dry powder, Halon®, carbon dioxide, sand, earth and water mist.
Unsuitable: Water jet.
Protective Equipment for Fire Fighting: Self-contained breathing apparatus.

VI. Accidental Release Measures:
Personal Precautions: Wear gloves and protective overalls.
Environmental Precautions: Do not allow it to enter drains.
Spillage: Contain spill and keep from entering waterways. Absorb on porous material. Large quantities can be pumped.

VII. Handling and Storage:
Handling: No special handling precautions necessary.
Storage: Do not store at elevated temperatures.

VIII. Exposure Control / Personal Protection:
Respiratory Protection: Hydrocarbon absorbing respirator if misting.
Hand Protection: Oil-proof gloves for hypersensitive persons.
Eye Protection: Glasses, if applied to parts in motion.
Body Protection: Overalls.

IX. Physical and Chemical Properties:
Physical State: Liquid
Color: Purple
Odor: Lube Oil
pH: Neutral
Boiling Range / Point °F (°C): >700 (>371)
Pour Point °F (°C): -10 to -40 (-23 to -40)
Flash Point (COC) °F (°C): >400 (>204)
Autoignition Temperature °F (°C): >550 (>288)

Evaporation Rate (Butyl Acetate = 1): <0.01
Vapor Pressure (kPa): <0.1
Percent Volatiles: None
Density (g/cm³): >0.86
Flammability: Not flammable at ambient temp.
OAR Value: UN
Oxidizing Properties: None
Water Solubility: Insoluble
Vapor Density: Greater than Air

X. Stability and Reactivity:

Stability: Chemically stable under normal conditions. No photoreactive agents.
Conditions to Avoid: Powerful sources of ignition and extreme temperatures.
Materials to Avoid: Strong inorganic and organic acids, oxidizing agents.
Hazardous Decomposition Products: Burning generates smoke, airborne soot, hydrocarbons and oxides of carbon, sulfur and nitrogen. Residue mainly comprised of soot and mineral oxides.

XI. Toxicological Information:

Acute Toxicity: Not known
Irritancy-Skin: Very mild
Skin Sensitization: Not known
Subacute / Sub-chronic Toxicity: Not known
Genotoxicity: None known
Chronic Toxicity: None known

California Prop 65: N/A
Carcinogen: NTP: No
IARC: No
OSHA: No
EC Classification (67 / 548 / EEC): No
LC-50: >2000mg/l - extrapolated from component data
LD-50: Not applicable

XII. Ecological Information:

Possible Effects: In extreme cases, may germinate oil fractions that could act as a marine pollutant. Occurrences of this nature are highly unlikely.
Behavior: Relatively well behaved. Bioaccumulation potential nil.
Environmental Fate: Due to its fluid nature and specific gravity, this product will float or spread across water making it a nuisance contaminant. It is not thought to be toxic to marine or land organisms.

XIII. Waste and Container Disposal:

Waste Disposal: Consider recycling. This product, as sold, does not meet the RCRA characteristics of a hazardous waste. Under RCRA, it is the responsibility of the user, at the time of disposal, to determine whether the product meets the RCRA criteria for hazardous waste. Contact a waste disposal company or local authority for advice.
Container Disposal: See waste disposal section listed above.

XIV. Transport Information:

DOT: Nonhazardous
UN No.: N/A
DOT: Nonhazardous

Air Transport (ICAO, IATA): Bulk Nonhazardous
Sea Transport (IMO, IMDG): Bulk Nonhazardous
Road and Rail Transport (ADR / RID): Bulk Nonhazardous

XV. Regulatory Information:

Labeling Information: None needed
EC Annex 1 Class.: N/A
R Phrases: N/A
SARA 311 / 312: None
S Phrases: S-3 keep cool, S-16 keep away from ignition sources
Ozone Depleting Chemicals: N/A

CERCLA: Nonhazardous
TSCA: All components are listed
WHMIS (Canada): Not regulated
Canadian DSL: All components are listed
40 CFR Part 372 (SARA Section 313): N/A
RCRA Hazard Class: Nonhazardous
TSCA 12B Components: None

XVI. Other Information:

Signature: A J Gustavsen

Prepared By: A. J. Gustavsen, Ph.D.

Date Issued/Revised: October 11, 2005

As of issue date, the information contained herein is accurate and reliable to the best of Royal Purple's knowledge. Royal Purple does not warrant or guarantee its accuracy or reliability and shall not be liable for any loss or damage arising out of the use thereof. It is the user's responsibility to satisfy itself that the information offered for its consideration is suitable for its particular use.

LEGEND

I. Identification of the Substance / Preparation and Company
II. Composition Information on Ingredients
III. Hazards Identification
IV. First Aid Measures
V. Fire Fighting Measures
VI. Accidental Release Measures
VII. Handling and Storage
VIII. Exposure Control / Personal Protection
IX. Physical and Chemical Properties
X. Stability and Reactivity
XI. Toxicological Information
XII. Ecological Information
XIII. Waste Disposal
XIV. Transport Information
XV. Regulatory Information
XVI. Other Information

NFPA SYMBOL

HMIS SYMBOL

HEALTH	0
FLAMMABILITY	1
REACTIVITY	0
PPI	B